INSPIRE VLF-3 Receiver Kit

Assembly Instructions

The following assembly instructions should be followed carefully. The INSPIRE VLF-3 receiver kit is NOT a simple electronic assembly. If you follow the instructions carefully you should be successful in building a receiver that works. If you are not careful, you run the risk of having a problem that is very difficult to locate and fix. Be careful, take your time, and GOOD LUCK!

TOOLS NEEDED:

Philips head screwdriver
Small standard screwdriver
Wire cutters
Wire stripper
Soldering iron (15-25 watt, small tip)
Light duty resin core solder (60/40)
Sponge
Magnifying glass
Solder sucker or solder wick

KIT CONTENTS:

1. Black plastic enclosure
2. Face Plate
3. Printed Circuit Board (PCB)
4. Five bags of components:

Bag 1	resistors, inductors
Bag 2	capacitors
Bag 3	ICs, diodes, sockets
Bag 4	switches, jacks, knobs, antenna terminal, wires, misc. hardware

Faceplate

Front Control Panel

Printed Circuit Board (PCB):

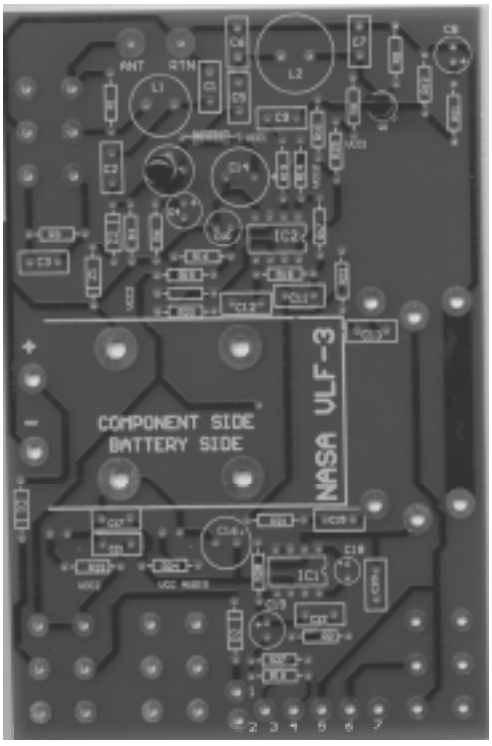

Component Side / Battery Side

All electronic components are inserted from this side and soldered on the other side. The battery holder is inserted from this side also.

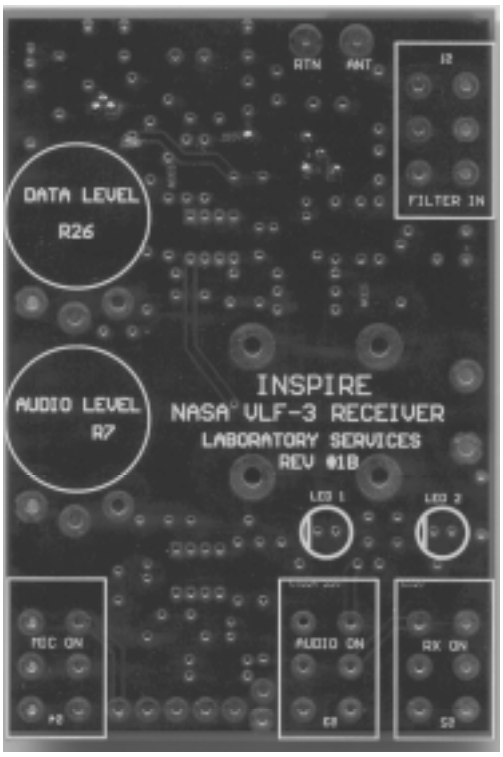

Switch Side

The four DPDT slide switches, the two 10k pots and the two LEDs are inserted from this side and soldered on the other side.

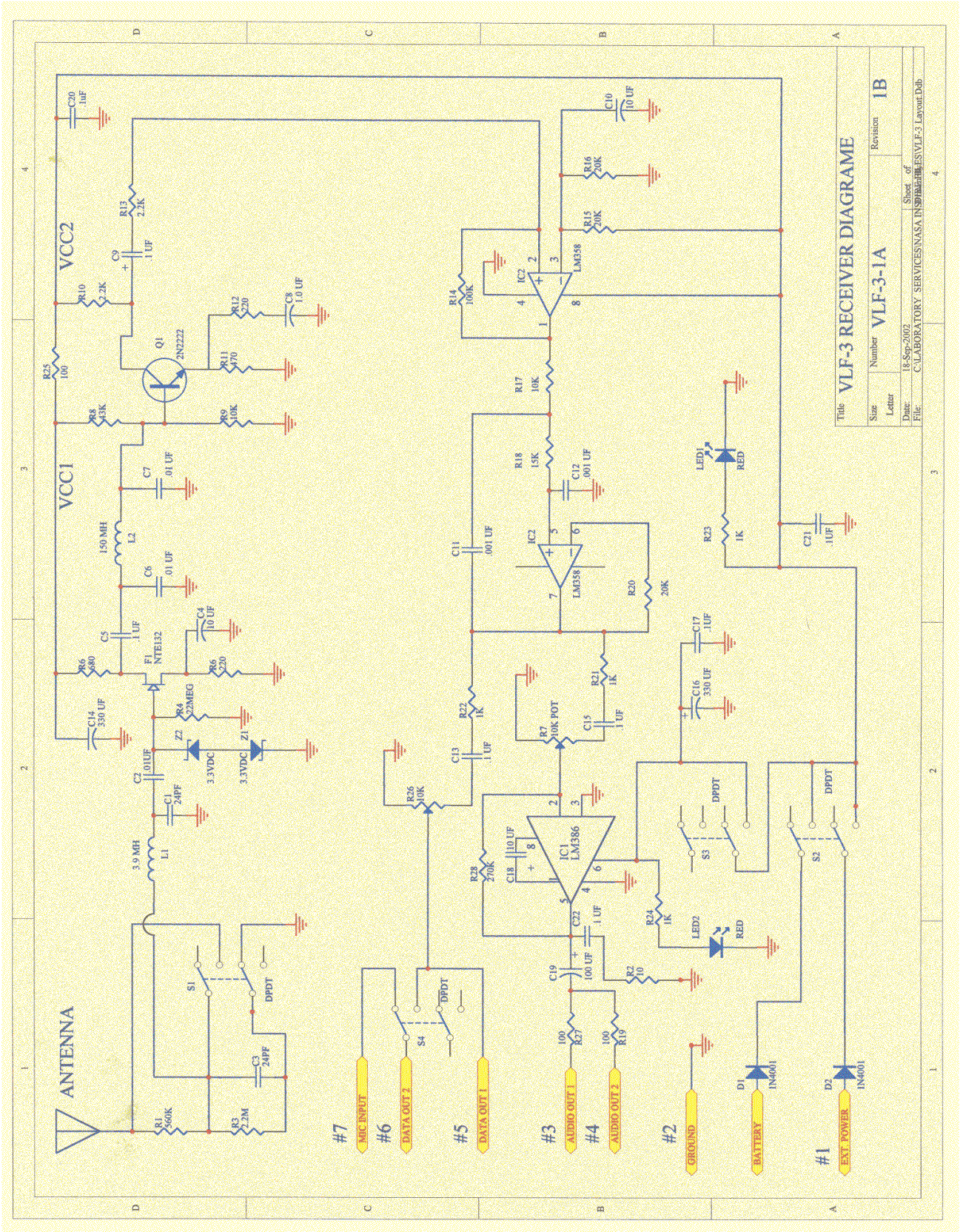
VLF-3 RECEIVER DIAGRAME
VLF-3-1A
1B
18-Sep-2002
ANTENNA
VCC1
VCC2
#7 MIC INPUT
#6 DATA OUT 2
#5 DATA OUT 1
#3 AUDIO OUT 1
#4 AUDIO OUT 2
#2 GROUND
BATTERY
#1 EXT. POWER

ASSEMBLY SEQUENCE

1. Solder components to PCB.
2. Assemble jacks subassembly, connect wires to antenna terminal.
3. Connect wires to PCB.
4. Final assembly of receiver.
5. Test receiver.

(Check off boxes as each step is completed.)

☐ 1. Solder components to PCB.

(NOTE: The transistor (Q1), the field effect transistor (J-FET with ferrite bead) and R5 have been preinstalled.)

☐ 1a. Sort and install resistors.

Remove the resistors from Bag 1. Leave the inductors for later installation.

The colored bands on the resistors indicate the resistance using a color code. This table indicates how to convert each color to its numerical equivalent.

0	black
1	brown
2	red
3	orange
4	yellow
5	green
6	blue
7	violet
8	gray
9	white

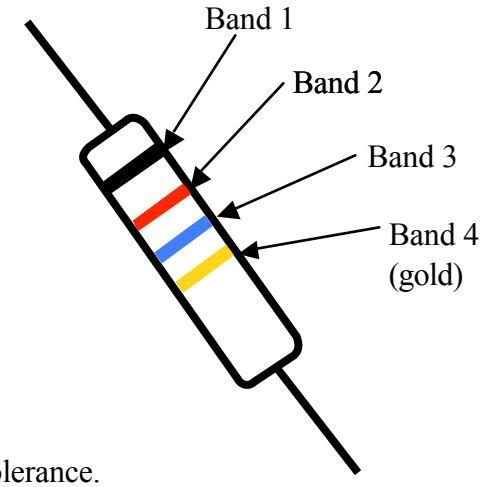

gold: 5% tolerance.

To read a resistor code, first locate the gold band and read the colors in order from the other end. (All resistors in this kit have a gold band indicating 5% tolerance.) The first two bands indicate digits in the resistance, the third band (called the multiplier) indicates the number of zeroes to be added to the digits to obtain the resistance.
(NOTE: 1000 = kilo = k ; 1,000,000 = mega = Meg)

Bag 1 Contents

Resistors:

R1	560 kΩ
R2	10 Ω
R3	2.2 MegΩ
R4	22 MegΩ
(R5 680 Ω - installed)	
R6, R12	220 Ω
(R7 10k pot in Bag #4)	
R8	43 kΩ
R9, R17	10 kΩ
R10, R13	2.2 kΩ
R11	470 Ω
R14	100 kΩ
R15, RR16, R20	20 kΩ
R18	15 kΩ
R19, R25, R27	100 Ω
R21, R22, R23, R24	1 kΩ
R28	270 kΩ

Inductors

L1	3.9 mH
L2	150 mH

What is the resistance for each of the following?

	Example 1	Example 2	Example 3	Example 4
Band 1 Band 2 Band 3	brown black brown	yellow violet orange	red black green	orange orange orange
Band 1 Band 2 Band 3	1 0 1	4 7 3	2 0 5	3 3 3
Resistance	100 100 Ω	47000 47 kΩ	2000000 2 MegΩ	33000 33 kΩ

Use the resistor code to identify and sort all of the resistors. One good way to keep them sorted is to tape one end to a piece of paper and write the resistance and component number (R1, R2, etc.). Once you have identified and sorted all of the resistors, you are ready to solder them to the PCB.

To prepare a resistor for insertion into the board, bend the two leads so that they form a right angle to the resistor body.

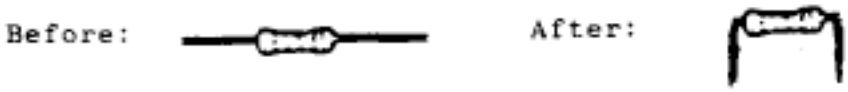

Resistor locations on the component side of the PCB are indicated with the "R" number from the parts list between the two holes for insertion of the leads.

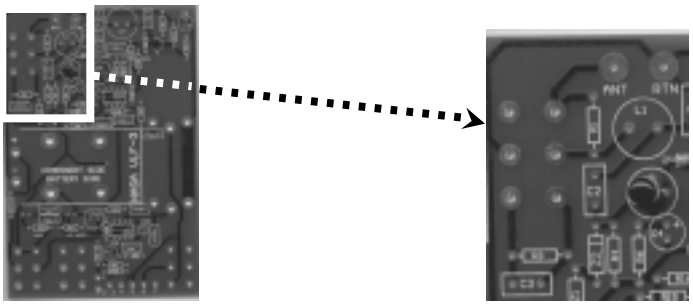

Part of the PCB showing location of R1, R3, R4 and R6.

To install, place the leads of the resistor through the appropriate holes and press the resistor down against the component side of the PCB. (There is no required orientation for resistors. Either lead may be inserted in either hole.) Turn the board over while holding the resistor in position and bend the leads slightly outward to hold the resistor in place and solder the leads to the circuit side. (NOTE: There will be an empty resistor symbol on the PCB between R5 and R20. No part will be installed in this location.)

STEPS FOR SOLDERING RESISTORS, CAPACITORS AND WIRES:

IMPORTANT:
DO NOT leave a soldering iron plugged in for a long time without using it.
NEVER leave a hot soldering iron unattended.

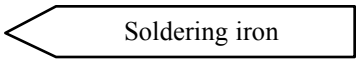

1. Clean the tip of the iron by wiping it on the wet sponge.

2. Place a small amount of solder on the tip.

3. Press the tip down against the circuit contact and against the resistor lead and hold for 5 seconds.

4. After the lead and the contact have heated for 5 seconds, apply the solder to the lead and contact (NOT directly to the iron) until the solder melts and flows around the lead and into the contact.

5. Apply enough solder to allow it to run down along the lead. Do not apply so much solder that it runs across the PCB surface.

6. After enough solder has been applied (1-2 seconds), remove the solder wire but hold the iron in place for another 2-3 seconds.

7. Remove the iron, allow the joint to cool and inspect the joint.

8. Trim the excess lead wire just above the solder joint.

Repeat this process for the remaining resistors.

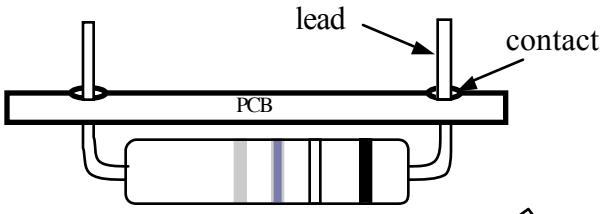

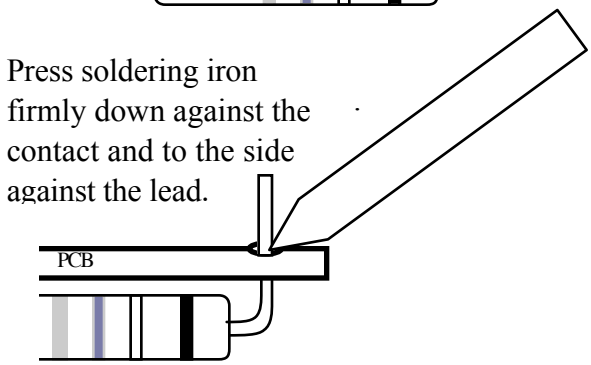

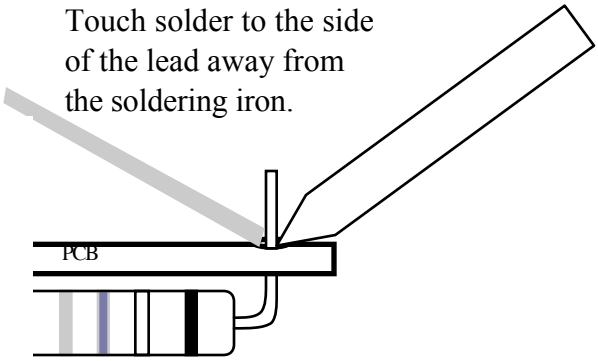

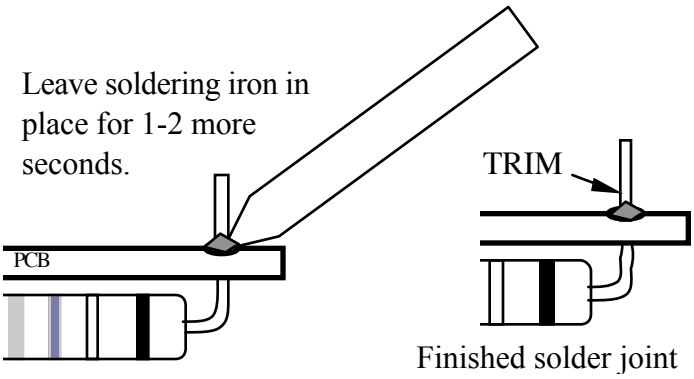

IMPORTANT Note for New Soldering Irons:

A new soldering iron must be "tinned" in order to work well. Follow these steps:

1. Plug in the iron.
2. When it first heats up, apply solder liberally to the tip.
3. Wipe off the excess solder and you are ready to go!

☐ 1b. Install the IC sockets.

Remove the IC sockets and IC1 and IC2 from Bag #3. When installing IC sockets and ICs, alignment is very important. One end of the IC symbol on the PCB has a half-hole at one end of the symbol. One end of the socket has a half-hole. The IC itself has a circular dot near one end.

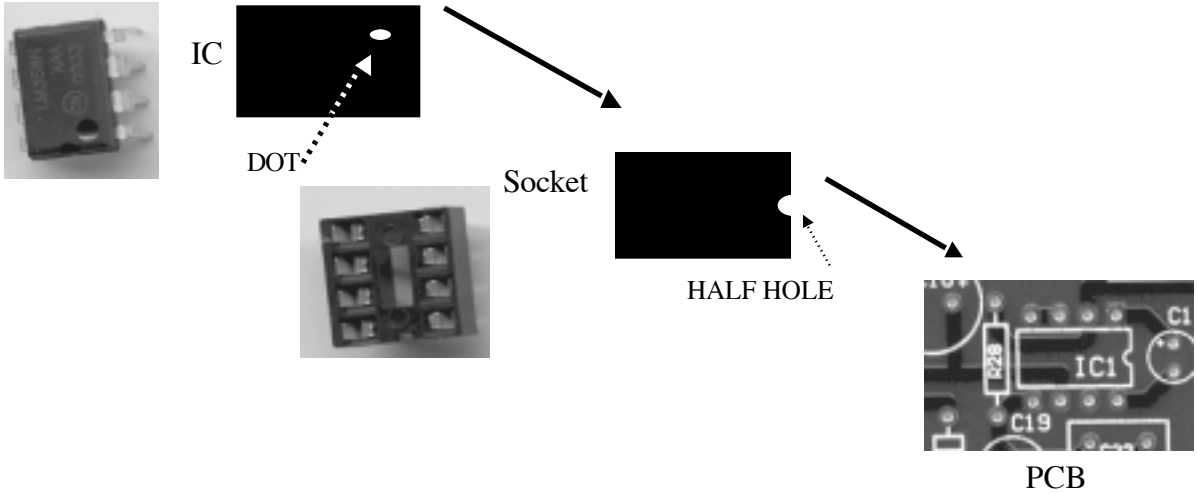

Install the sockets so that the half-hole end coincides with the half-hole on the PCB. Press the sockets firmly against the component side of the PCB. Solder the 8 pins on the other side of the PCB taking care not to create any solder "bridges" between the pins.

Install the IC so that the end with the dot is at the end of the socket with the half-hole. Carefully fir the 8 pins in the socket holes and press the IC firmly into the socket.

☐ 1c. Solder capacitors to the PCB.

Capacitor Identification Guide

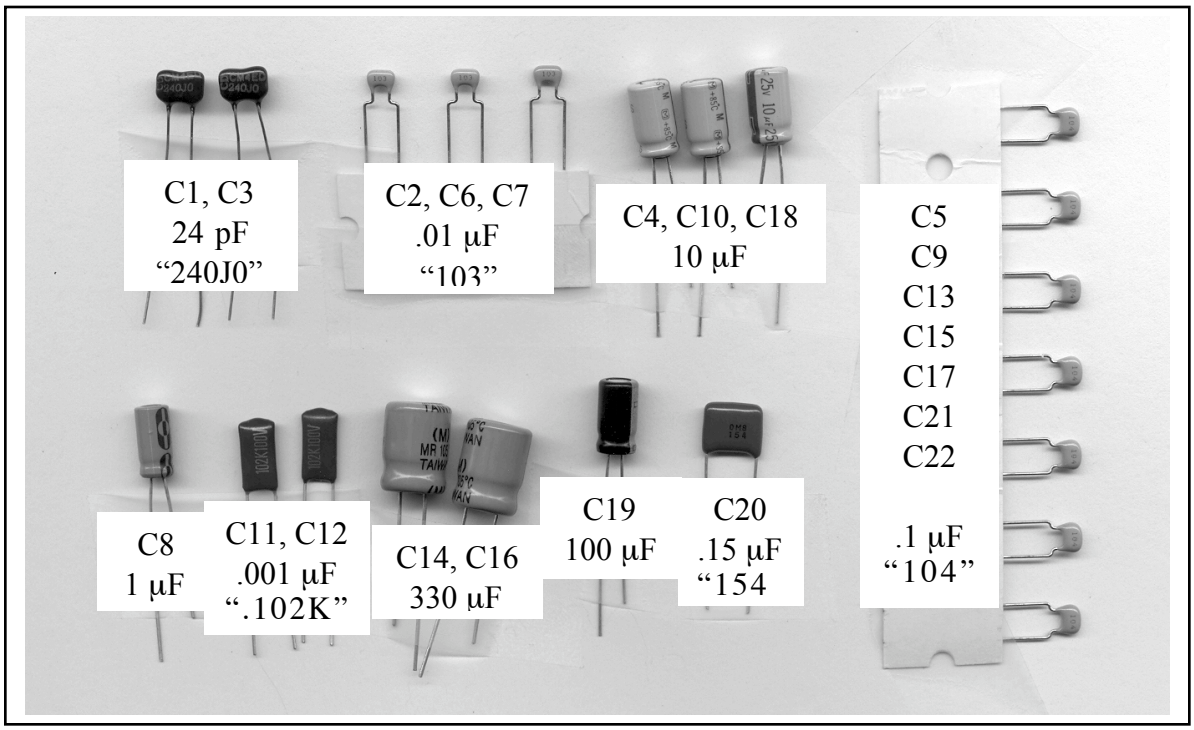

The small-value ceramic capacitors may be installed in either orientation, but the larger-value cylindrical capacitors (C4, C8, C10, C14, C16, C18, C19) must be installed with the proper polarity.

The polarity is indicated on the PCB by a “+” sign near one end of the capacitor location.

The polarity is indicated on the body of the capacitor with a stripe with a minus (-) sign located on the negative side of the capacitor. Also, the shorter lead is the negative lead.

To install a capacitor, insert the leads in the appropriate holes and press the capacitor down near the PCB. Solder using the same technique as used for resistors.

The polarity is not marked on capacitor C 10.
The proper polarity is indicated here:

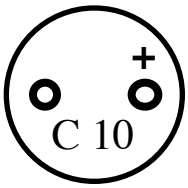

Bag #2 Contents

Capacitors:

C1, C3	24 pF
C2, C6, C7	.01 µF
C4, C10, C18	10 µF
C5, C9, C13, C15, C17, C21, C22	.1 µF
C8	1 µF
C11, C12	.001 µF
C14, C16	330 µF
C19	100 µF
C20	.15 µF

☐ 1d. Install the inductors (L1 and L2)

The inductors are the two remaining parts in Bag #1. Inductor L1 is marked “LH 239”.. Inductor L2 is marked “LJ 415”. From the component side, press the inductor firmly down against the PCB and solder the other side. There is no required polarity for the inductors.

☐ 1e. Install the diodes from Bag #3.

Polarity is very important in the installation of diodes.

D1 and D2 are black cylinders with a silver stripe near one end.

On the PCB, the D1 and D2 locations are shown as a rectangle with a stripe near one end.

Align the striped end of the diode with the striped end of the PCB synbol. Press the diode firmly against the component side of the PCB and solder the other side.

Remaining Bag #3 Contents

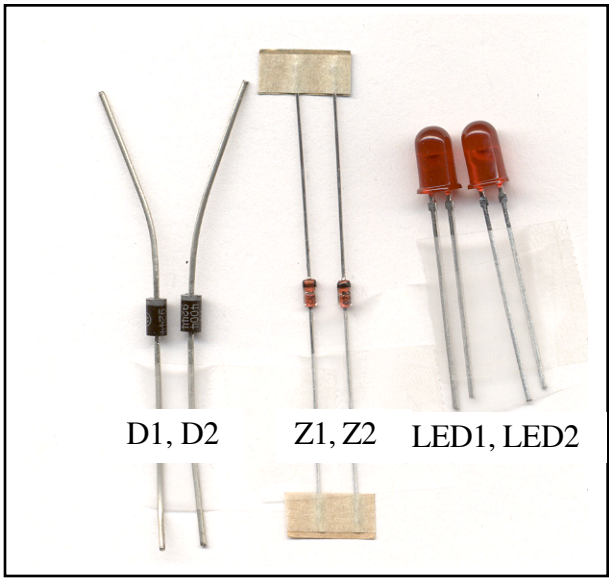

Z1 and Z2 are small components with a black stripe near one end. The symbol on the PCB is the same as for D1 and D2. As with D1 and D2, align the black stripe end with the striped end on the PCB. Press the diodes firmly against the PCB and solder the other side.

Return the LEDs to Bag #3. They will be installed later.

☐ 1f. Install the battery holder.

From Bag #4, take the following parts:

1.	Battery holder
2	PCB standoff post
2	4-40 3/8 " screw
4	4-40 1/4" screw
2	4-40 nuts
2	nylon washers
2	#4 washers

The following diagram shows the assembly of the battery holder to the PCB:

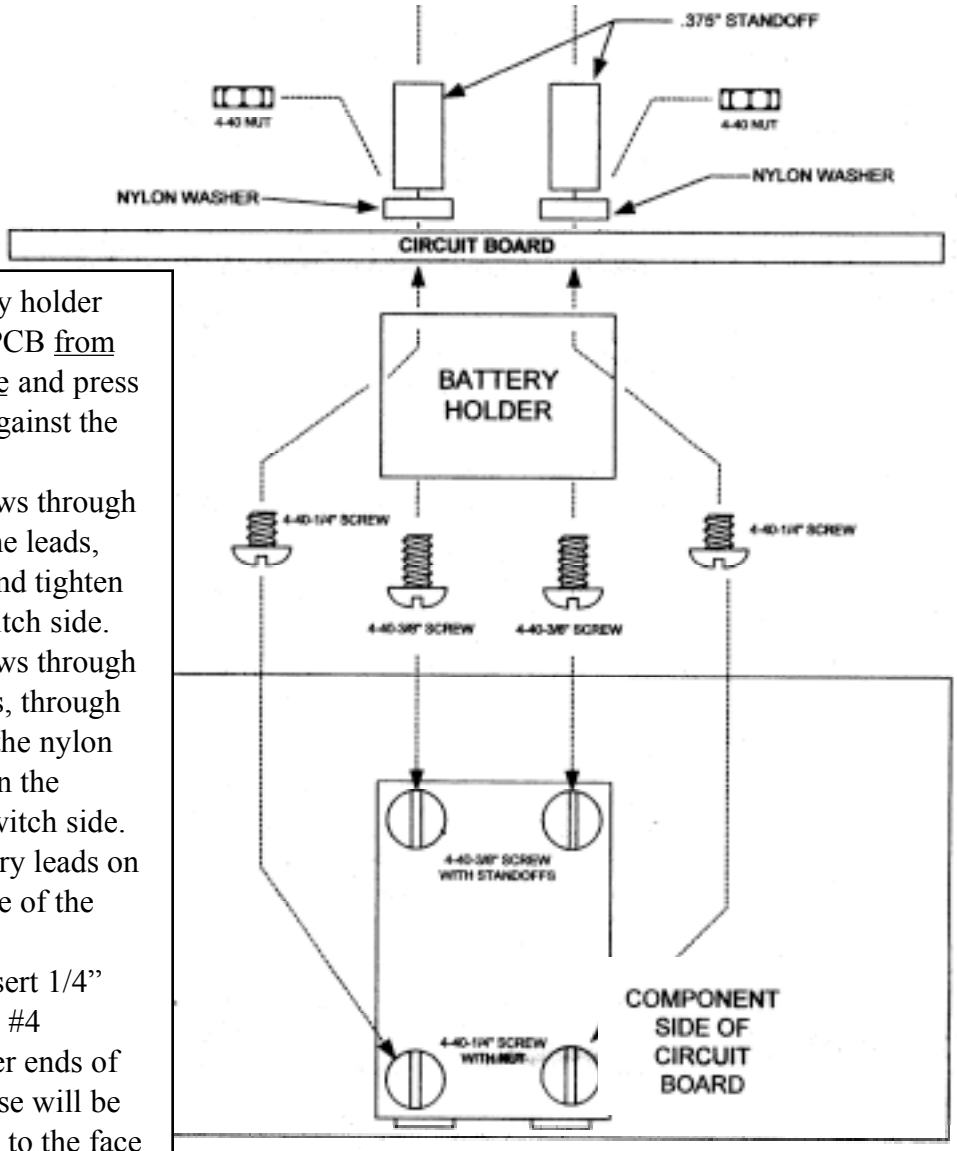

1. Place the battery holder leads through the PCB <u>from the component side</u> and press the holder firmly against the PCB.
2. Insert 1/4" screws through the holes nearest the leads, through the PCB and tighten the nuts on the switch side.
3. Insert 3/8" screws through the other two holes, through the PCB, through the nylon washers and tighten the standoffs on the switch side.
4. Solder the battery leads on either (or both) side of the PCB.
5. Temporarily insert 1/4" screws through the #4 washers in the other ends of the standoffs. These will be used later to attach to the face plate.

☐ 1f. Install the switches.

From Bag #4, remove the two 10k pots (R7 and R26) and the four DPDT slide switches.

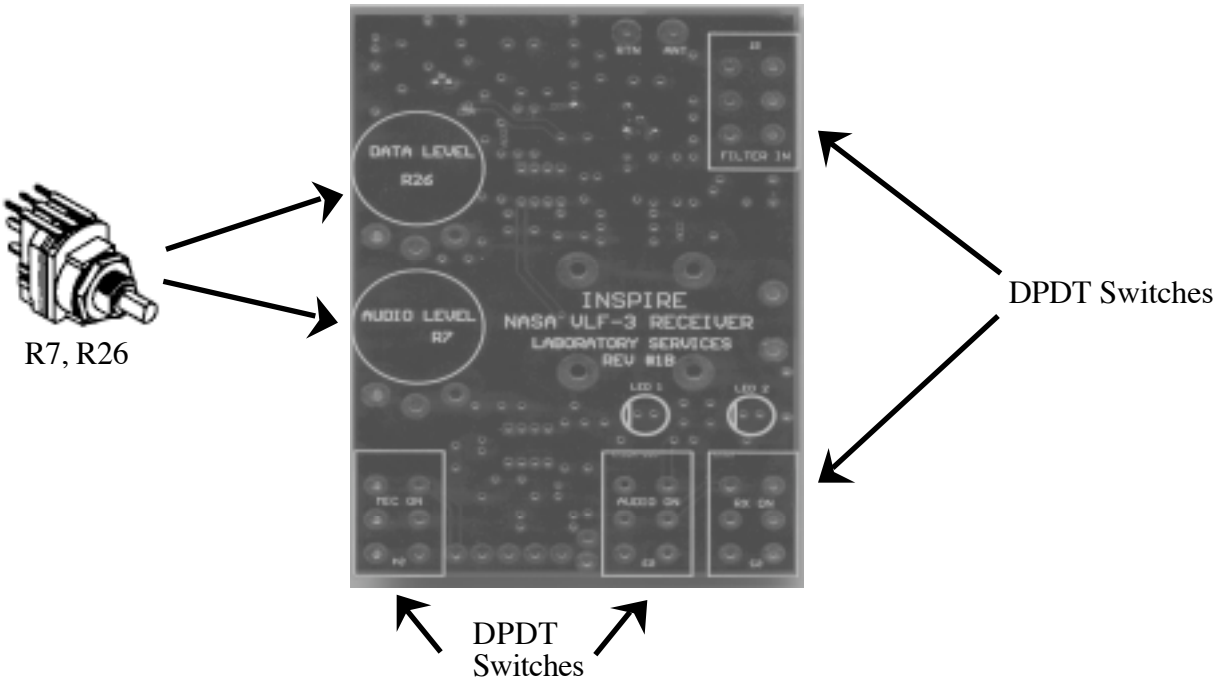

Slide the three contacts for the pots through the holes provided from the switch side of the PCB. Push the switch firmly against the PCB and solder either (or both) sides.

Insert the six contacts for each DPDT slide switch into position and press the switch firmly against the switch side of the PCB. Solder each contact on the component side.

☐ 1g. Install the LEDs.

Align the LED leads as shown with the shorter lead closest to the line in the PCB symbol.

Carefully work the LED down as far as it will go toward the PCB. When in the proper position, the top of the LED will be even with the tab on the adjacent power switch.

Solder the LED leads to either side of the PCB. Carefully trim the excess leads.

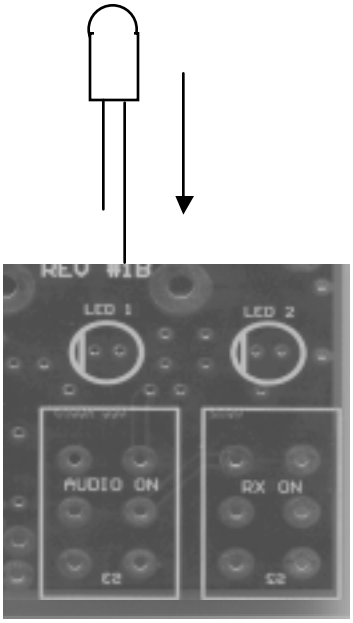

THIS COMPLETES THE INSTALLATION OF ALL PARTS ON THE PCB!

☐ 2. Attach wires to the PCB.

Bag #4 contains the following wires all in 3” pieces:

2	red
1	orange
1	yellow
1	blue
1	black
1	white

Make the following cuts on the wires:

1 red:	2”, 1” (set the 2” piece aside for later)
1 red:	2” (the remaining piece is not used)
1 orange:	1.5”, 1.5”
1 yellow:	1.5”, 1.5”
1 blue:	1.5” (the remaining piece is not used)
1 black:	2”, 1”
1 white:	1.5”, .75”, .75”

To prepare a wire for soldering, strip about 1/8” of insulation from each end. To solder a wire to the PCB:

1. insert the wire into the component side,
2. press the soldering iron to the wire and to the metal pad on the PCB for about 5 seconds to heat both the wire and the pad,
3. apply solder to the side away from the soldering iron making sure that the wire and pad melt the solder, not the soldering iron.

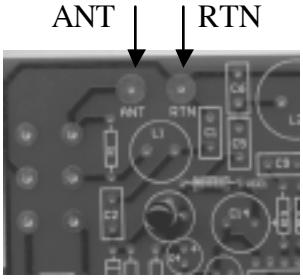

Solder the 1” red wire to the ANT connection on the PCB.
Solder the 1” black wire to the RTN connection on the PCB

The wire connections to the PCB are numbered 1-7.
Connect the following wires to the appropriate locations:

Connection 1: 2” red wire
Connection 2: 2” black wire and 1.5” white wire twisted together
Connection 3: 1.5” orange wire
Connection 4: 1.5” orange wire
Connection 5: 1.5” yellow wire
Connection 6: 1.5” yellow wire
Connection 7: 1.5” blue wire

See also the photos on the following page.

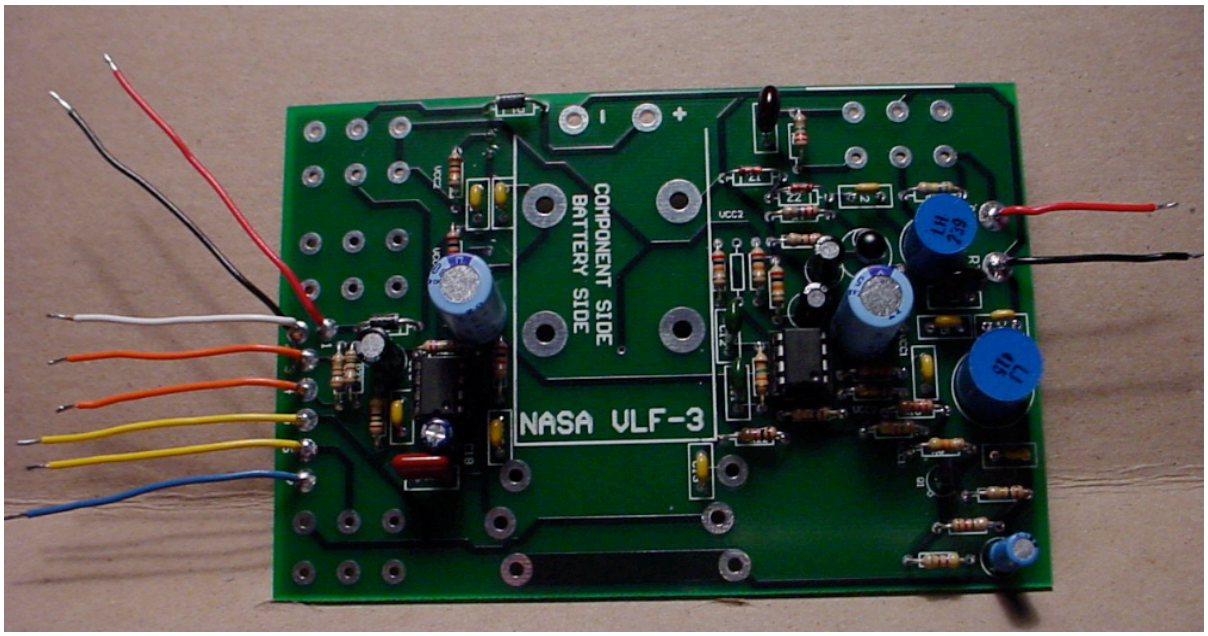

Wires installed (component-side view)

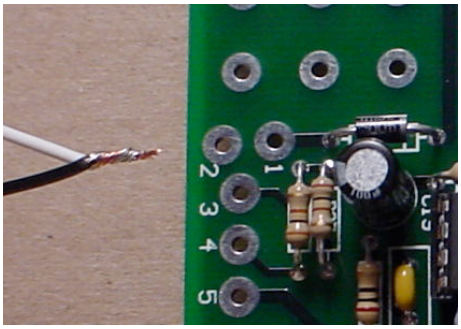

Close up of white and black wire twisted together prior to being soldered to location #2 on the PCB.

Wires installed (switch-side view)

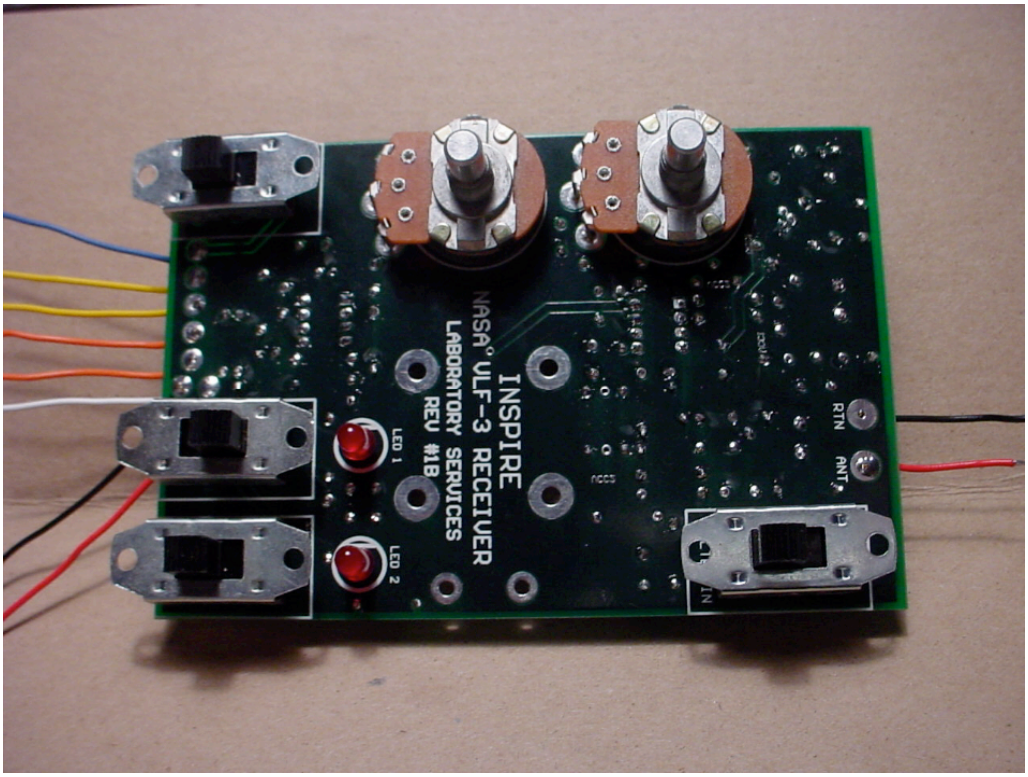

☐ 3. Install the jacks and connectors to the faceplate.

Install the jacks and the external power connector to the faceplate by inserting them from the back side and tightening the knurled nut on the front side. Mount the 2-screw antenna terminal to the faceplate by placing the terminal in front of the faceplate and using the two remaining 4-40 1/4" screws and nuts. Mount the BNC connector by removing the nut and washer, inserting the connector from the front of the panel and tightening the nut over the washer.

☐ 4. Attach the PCB to the faceplate.

Remove the nuts and washers from the standoffs and the nuts from the shafts of the 10k pots. Attach the faceplate to the PCB by fitting the faceplate over the switches and LEDs. Tighten the screws and washers to the standoffs. Tighten the nuts on the 10k pot shafts.

☐ 5. Solder wires to jacks and connectors.

To solder the wire to a jack contact:

1. insert the wire through the hole in the tab,
2. press the soldering iron to both the wire and the tab and heat for 5 seconds,
3. apply the solder to the side away from the soldering iron, making sure that the wire and tab melt the solder, not the iron.

Use the following figure as a guide for wiring connections to the jacks and the external power connector. See also the photo on the next page.

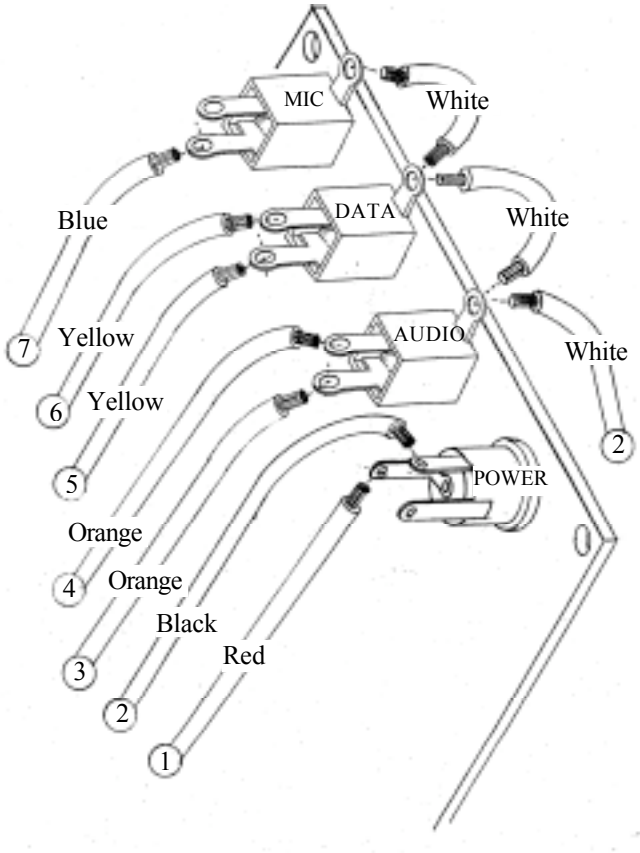

The monaural jack (white body) is the MIC jack. The blue wire connects to this jack.

The center two are the Audio and Data jacks and are the black body stereo type.

The round one is the external power connector.

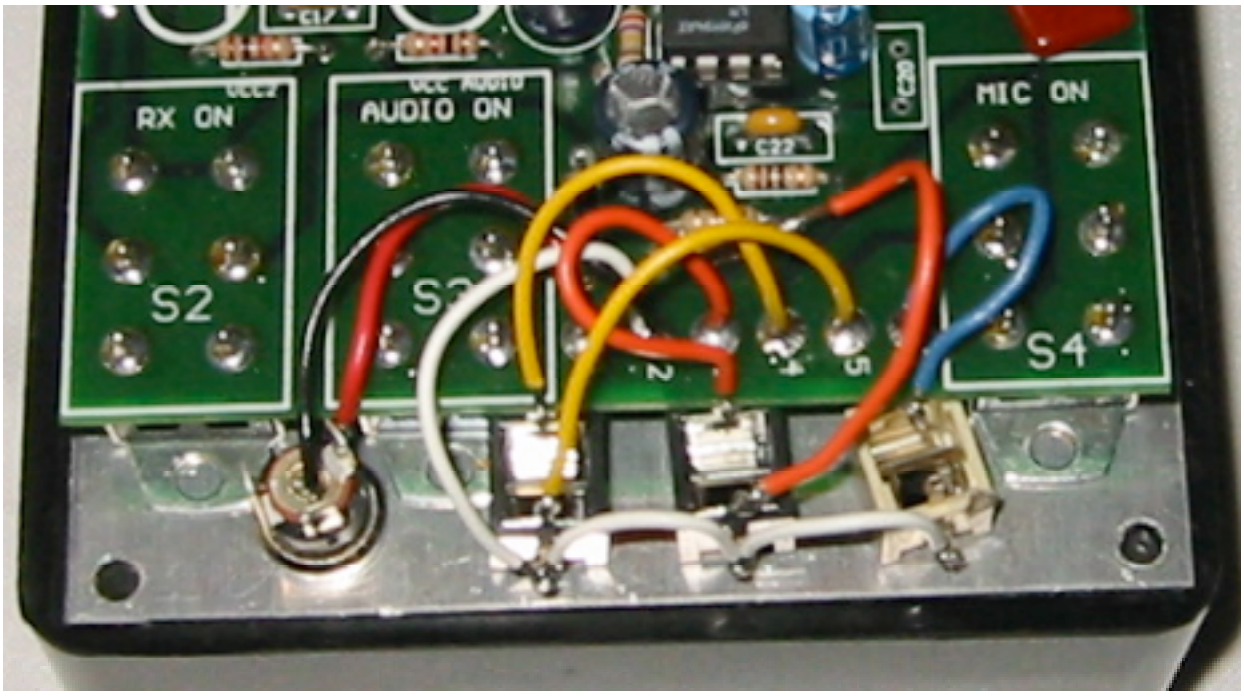

Close-up showing wires soldered to the jack tabs.

NOTE: The orange and yellow wires do NOT connect to the nearest jack.
The orange and yellow wires must cross to connect to the appropriate jacks.

Front view of completed VLF-3 receiver

Solder the black “RTN” wire to the RTN side of the antenna terminal.
Insert the 2” red wire into the BNC connector and solder in place.
Solder both red wires to the “ANT+” side of the antenna terminal.

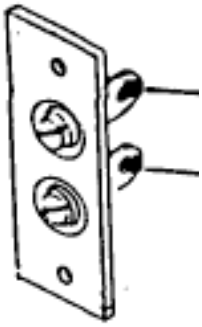

Antenna Terminal

Use the set screws to attach the knobs to the 10k pot shafts.

Install a 9-volt battery in the battery holder.

Use the 4 6/32 1/4 inch screws to attach the faceplate to the enclosure

THIS COMPLETES THE ASSEMBLY OF YOUR VLF-3 RECEIVER!

☐ 6. Test your receiver.

Attach an antenna to the ANT+ terminal. A 1-2 meter piece of wire will do.

Attach a ground to the RTN terminal. A short wire that you hold in your hand will do.

☐ 6a. Test the audio output.

Plug some headphones in the audio output jack.

Turn on the "RECEIVER POWER" switch (main power switch).

Turn on the "AUDIO POWER" switch and slowly turn the "AUDIO LEVEL" up.

You should hear a loud hum as you pick up the 60 hertz signal given off by building wiring.

☐ 6b. Test the data output.

Connect the "DATA" output jack with the microphone input of the cassette recorder using a stereo cable.

Connect headphones to the recorder.

Put a tape in the recorder and press "RECORD". (Put the recorder on "PAUSE" if you do not want tape running during this test.)

Turn on the "RECEIVER POWER" switch and slowly turn the "DATA LEVEL" up. You should hear the same signal as you did through the audio output.

Plug a microphone into the MIC IN jack. Slide the switch to the MIC. position. You should hear the 60 hertz hum in one ear and the microphone input in the other ear.

☐ 6c. Field test your receiver.

To ready your receiver for field testing, you will need a better antenna and a better ground.

A good antenna is Radio Shack Part No. 270-1408A. This is a 1.8 meter telescoping antenna that is easily portable. A 2 meter length of sturdy wire will work almost as well but is slightly less easy to transport.

A good ground is a metal stake or pipe driven into the ground. Attaching a wire from the ground terminal to the stake will provide a good ground. Attaching a wire from the ground terminal to the body of a car (a counterpoise) will work also. In a pinch, you can touch the ground terminal and use your body as a ground.

If you hear a loud squeal as the output, check the output level and the ground connections.

This radio receiver kit was designed and produced by John Kohus of Laboratory Services of Irving, TX. John has been a valued contributor to the INSPIRE Project since 1989 and his continued support is greatly appreciated.

NOTE:

Caution should be used in identifying R3 (2.2 MegΩ) and R4 (22 MegΩ). The green band and the blue band can look similar. For best results, identify both components together so differences can be noted.

Any part shortages or discrepancies should be reported to:

Bill Pine
1348 N. Quince Avenue
Upland, CA 91786

pine@mail630.gsfc.nasa.gov

Any corrections, suggestions or recommendations for improvement of the assembly instructions would also be appreciated.

Thank you for your participation and support of The INSPIRE Project!